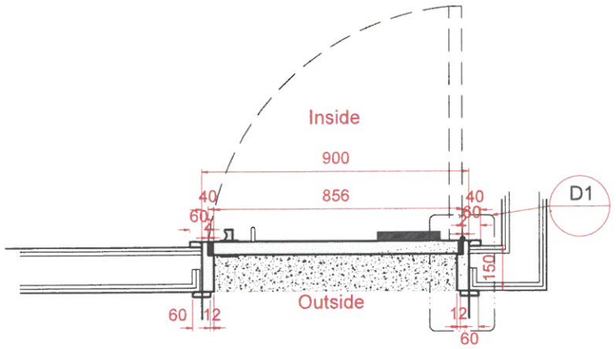

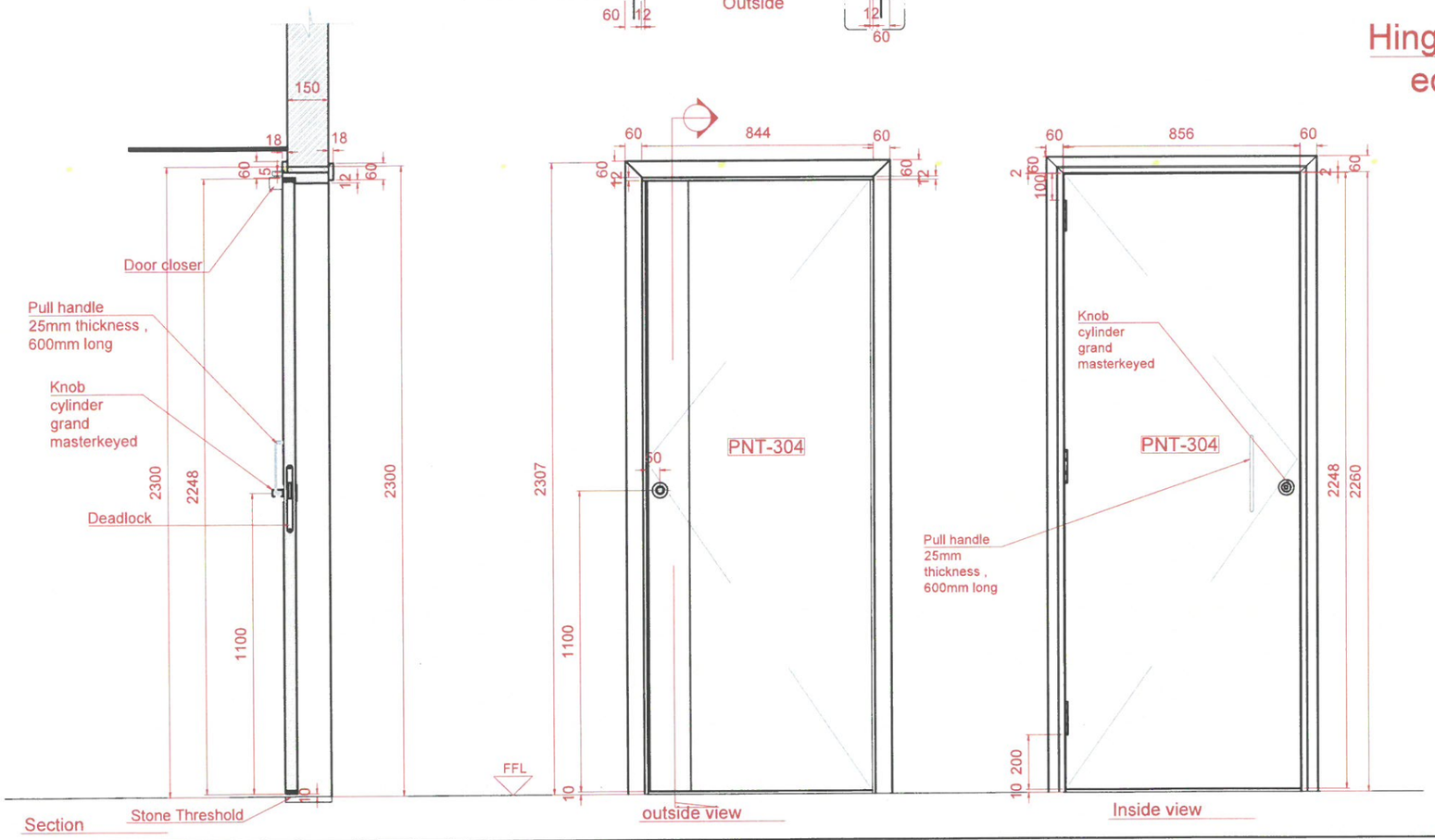

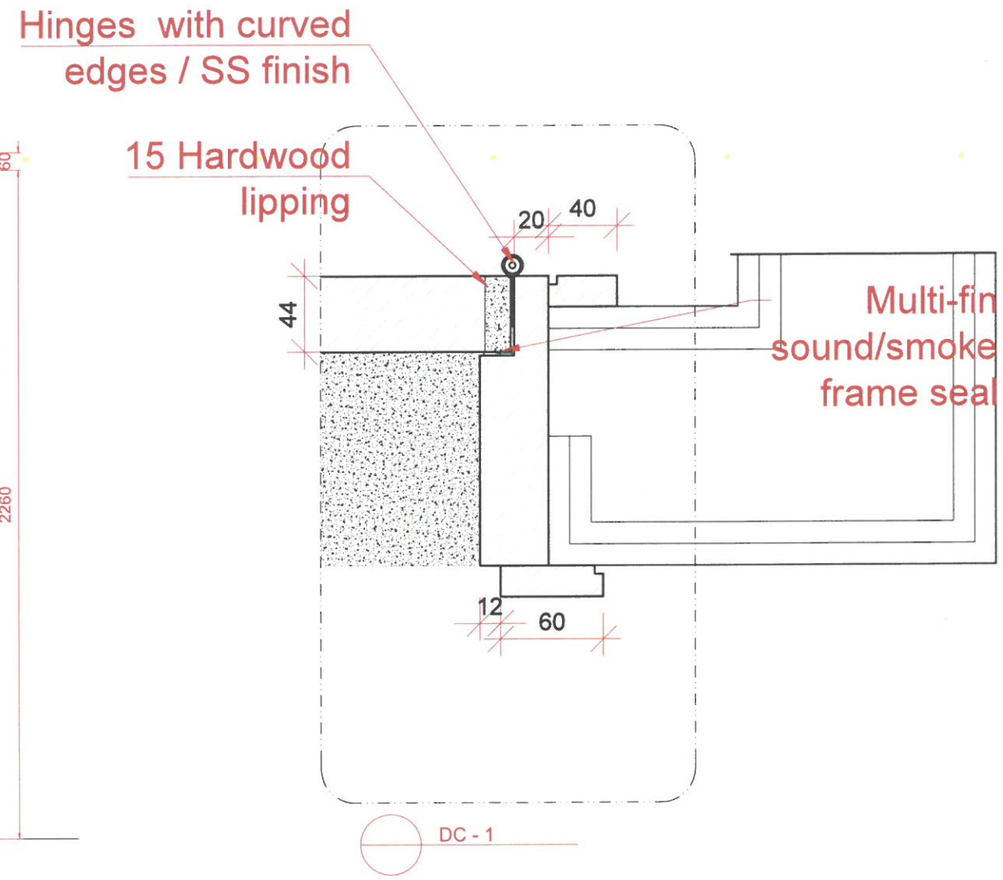
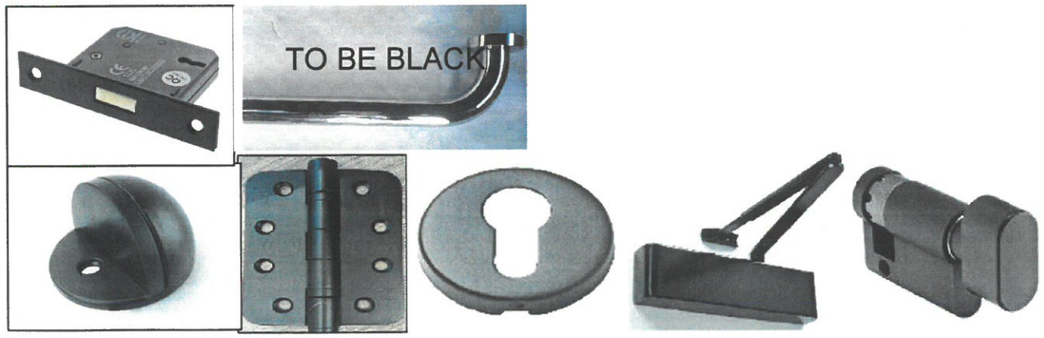
D13c-1	LOWER ROOF Bathroom entrance door	
panel Size	900mm W x 2300mm H x 44mm thk	
Finish	Painted to match PNT-304	
Door leaf type	Single door, single swing Flush door	
Ironmongery & Accessories	Lock: Cylinder Deadlock	Black Finish
	Knob cylinder grand masterkeyed	Black Finish
	Cylinder escutcheon	Black Finish
	Door closer - Concealed Door closer NON hold open	Black Finish
	Hinges Type 2 : Hinges with curved edges	Black Finish
	Pull handle	Black Finish
	Doorstop Type 2	Black Finish
Location	LOWER ROOF Bathroom entrance	
Total QTY	2	
Fire Rating	NA	
Acoustic	NA	
Remarks