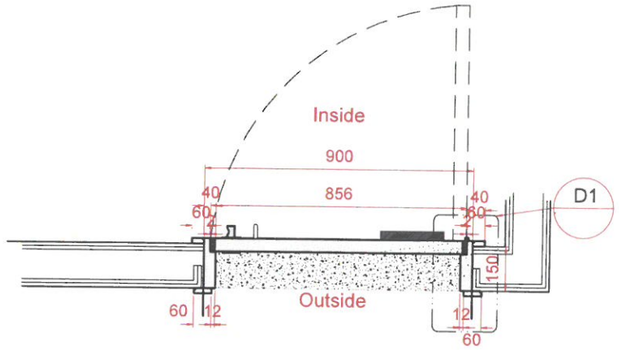

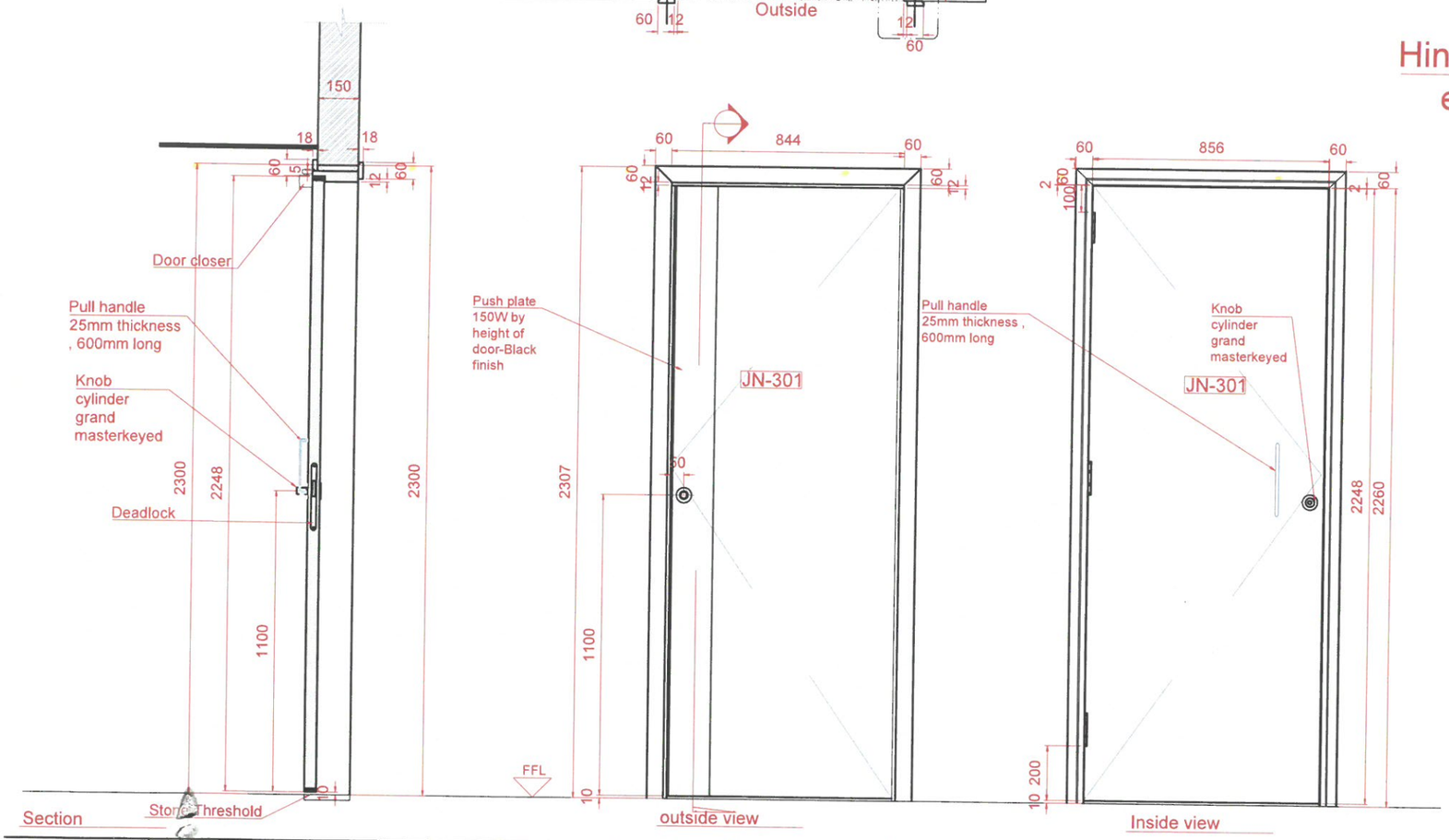

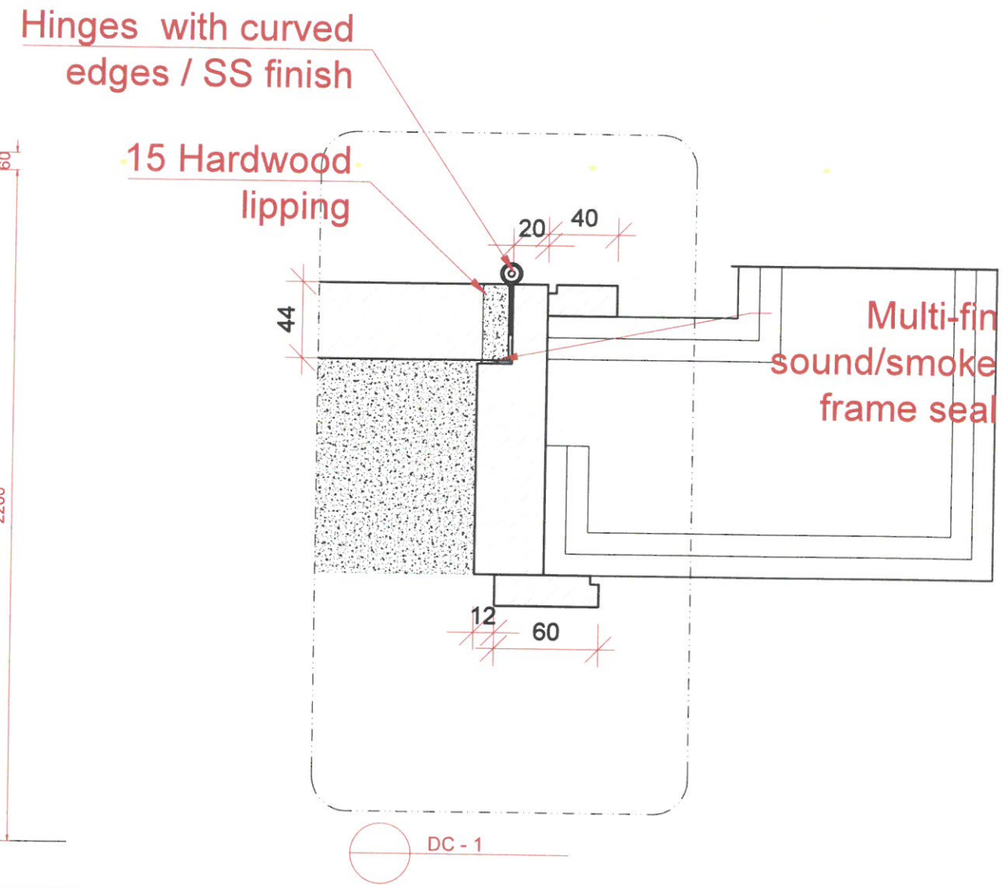
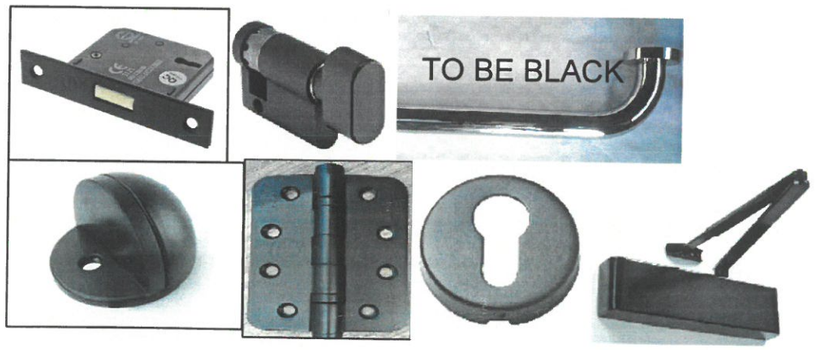
D13b	MEZZ Spa changing room entrance door	
panel Size	900mm W x 2300mm H x 44mm thk	
Finish	Stained to match JN-301	
Door leaf type	Single door, single swing Flush door	
Ironmongery & Accessories	Lock: Cylinder Deadlock	Black Finish
	Knob cylinder grand masterkeyed	Black Finish
	Cylinder escutcheon	Black Finish
	Door closer - Concealed Door closer EN 2-4 Non hold open	Black Finish
	Hinges Type 2 : Hinges with curved edges	Black Finish
	Pull handle	Black Finish
	Doorstop Type 2	Black Finish
Location	MEZZ Spa changing room entrance	
Total QTY	2	
Fire Rating	NA	
Acoustic	NA	
Remarks	NOTE : - Images and physical samples of all ironmongeries have been submitted for approval and have been approved. - General arrangement for door handling (LHS / RHS) will be considered for production